Daniel Kaufmann (Autor)

Size Effects on the Plastic Deformation of the BCC-Metals Ta and Fe

https://cuvillier.de/de/shop/publications/448

Copyright:
Cuvillier Verlag, Inhaberin Annette Jentzsch-Cuvillier, Nonnenstieg 8, 37075 Göttingen, Germany
Telefon: +49 (0)551 54724-0, E-Mail: info@cuvillier.de, Website: https://cuvillier.de

1

Introduction

In this work, mechanical size effects of the bcc metals α-Fe and Ta have been investigated. One of the major applications of Ta is its usage as anode material in small electrolytic capacitors. These capacitors are used in microelectronic devices such as cell phones or in the electronic circuits of vehicles. Furthermore, Ta is an appropriate material for medical devices and prostheses since it does not react with human tissue and human bodily fluids. Ta is chemically and thermally resistant which makes it an appropriate material for thermal barrier coatings. Jet engines of aircrafts made of Ni-super alloys contain Ta to give them more thermal stability. Fe is a metal of great technological importance since it is the basis of steel and due to its ferromagnetic properties, Fe is used in generators, transformers, relays and electric motors. The capabilities of these two metals are manifold and knowledge of their mechanical properties is necessary to optimize their applications. Both metals can be utilized in microelectronic or in micromechanical devices. For instance, a mill that removes deposits inside a blood vessel would need a tool that does not react with human tissue and a very small electric motor. Applications like these make it necessary to investigate the mechanical behaviour of materials like Ta and Fe on the micrometer scale.

Furthermore, the mechanical behaviour of small-scaled samples is of scientific interest since it might give new insights into the deformation mechanisms and related size effects. From studies of many fcc metals it is known that mechanical properties of metals change when at least one dimension of the sample is reduced into the micrometer regime or below. A commonly observed phenomenon is the increase in strength with decreasing dimensions ('smaller is stronger') .

The resistance of a metal against plastic deformation can be described by the yield strength or alternatively by the flow stress which is usually measured at 0.2% plastic strain. Plastic deformation in metals occurs by the motion of one-dimensional lattice defects, the so-called dislocations. Is the sample large compared to the typical length scales of the dislocation networks, the dislocation density can be considered to be de-

scribed by a homogeneous dislocation density. Thus, the yield strength of the metallic sample does not depend on its size. If one dimension of the sample is reduced into the micrometer regime, the yield strength becomes a function of sample size. In this regime, dislocations are not uniformly distributed anymore.

Although there are many studies in the literature that deal with mechanical size effects in fcc materials, the underlying mechanisms are still a matter of debate. This is even more pronounced for the size dependent behaviour of bcc metals.

The goal of this work is to investigate mechanical size effects of bcc metals and how they compare with results found for fcc metals. The comparison of both material groups will also lead to a deeper understanding of the involved dislocation mechanisms.

2

Background

2.1 Dislocations

Many properties of metals can be explained by considering their atomic bonds and crystal structure, for instance, their elastic constants, melting point, density etc.. Other properties can exhibit different values for the same metal. Examples are electrical conductivity, yield and fracture strength. The properties can be divided into two groups, the structure-insensitive and the structure-sensitive properties. The second group of properties depends on the defects that are present in the crystal structure of the metal. At temperatures above 0K, a crystal is not necessarily in thermodynamic equilibrium and will always contain defects. In this work, one-dimensional or line defects, the so-called dislocations, are of fundamental importance and will be discussed in more detail.

Dislocations are responsible for the phenomenon of slip by which most metals deform plastically. Two different types of dislocations can be distinguished, edge dislocations and screw dislocations. The two different types of dislocations are illustrated in figure (2.1). Figure (2.1(a)) shows the slip in a continuum that is produced by an edge dislocation. An important parameter of a dislocation in a crystal is its Burgers vector $\vec{b}$, which can be determined by the following procedure. Starting from an atom in a lattice a rectangle is drawn clockwise around the dislocation core whose edges contain the same number of atoms. The dislocation introduces a displacement into the crystal in a way that the rectangle will not be closed. The closure vector of the rectangle is the Burgers vector $\vec{b}$. For edge dislocations $\vec{b}$ is perpendicular to the dislocation line. In figure (2.1(b)) the slip produced by a screw dislocation is shown. The Burgers vector of a screw dislocation can be determined in an analogous way as the one of an edge dislocation. In this case the Burgers vector $\vec{b}$ is parallel to the dislocation line. If $\vec{b}$ is neither parallel nor perpendicular to the dislocations line, the dislocation is of mixed character and can be separated into an edge and a screw component.

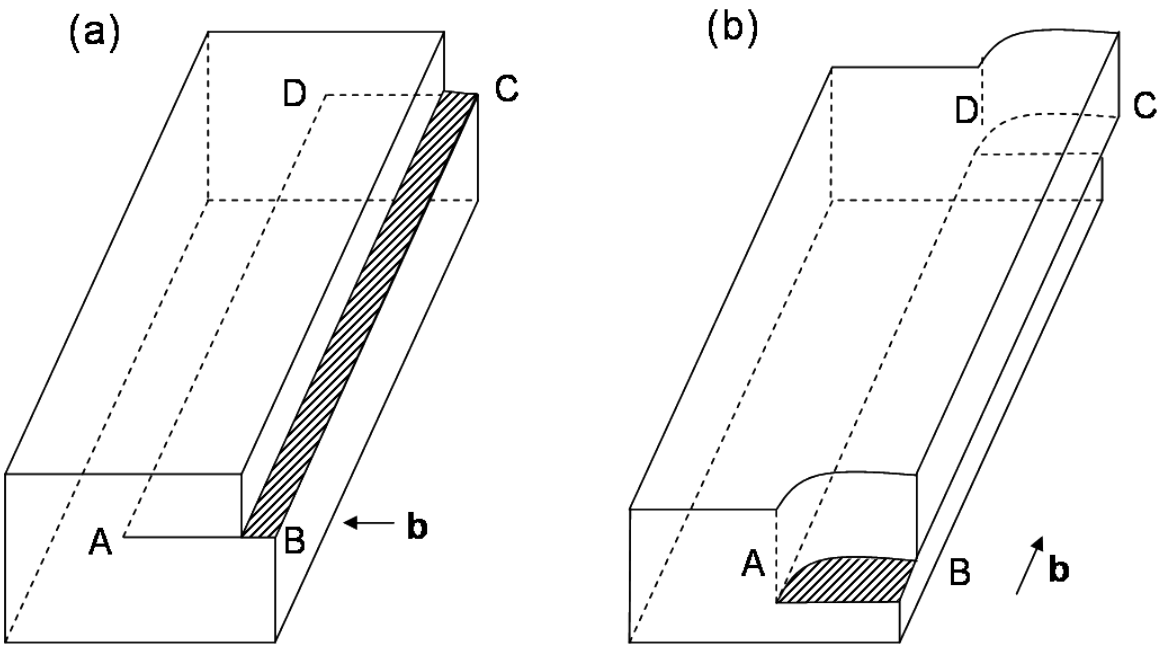

Figure 2.1: (a) Edge dislocation produced by slip in a continuum. Dislocation line is along AD, with $\vec{b}$ being perpendicular to AD. (b) Screw dislocation in a continuum. Dislocation line AD is parallel to $\vec{b}$. In both figures slip has occured over area ABCD.

2.2 Deformation of Single Crystals

In this work, the deformation behaviour of small single-crystalline metallic samples was investigated. The plasticity of single crystals is somewhat different from those of poly crystals, since the elastic and plastic properties of single-crystalline materials are usually not isotropic.

The extent of slip in a single crystal depends on the magnitude of the shearing stress produced by external loads, the geometry of the crystal structure, and the orientation of the active slip planes with respect to the shearing stresses. Slip occurs when the shearing stress on the slip plane in the slip direction reaches a threshold value, the so-called critical resolved shear stress (cf. figure (2.2)). The critical resolved shear stress can be determined according to

$$CRSS = \frac{P}{A} \underbrace{\cos\lambda \cdot \cos\phi}_{\text{Schmid factor}} \tag{2.1}$$

The Schmid factor is an important parameter when considering plastic deformation in single crystals. In fcc metals slip occurs on the slip system which exhibits the highest Schmid factor. In bcc metals slip does not necessarily occur on the slip system with

the highest Schmid factor, since the Schmid factor is only a geometric factor, that does not take packing densities of slip planes or mobility of dislocations into account.

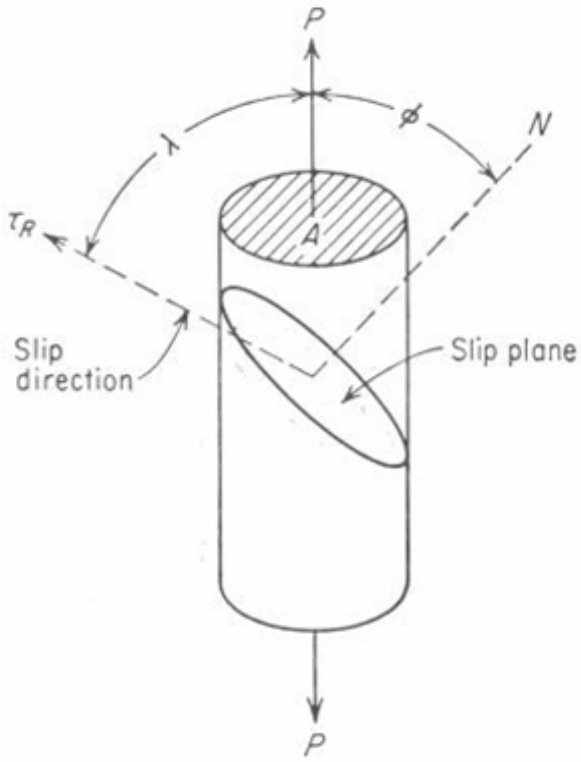

Figure 2.2: Diagram for the calculation of the critical resolved shear stress in a single crystal [1]. The load P acts on a single crystal with cross-sectional area A.

2.3 Plasticity in Bulk BCC Metals

BCC metals are of technological relevance and therefore the investigation of these materials is not only of scientific interest, but also valuable from a technological point of view.

Before investigating the small-scaled samples, it is useful to take a look at the deformation behaviour of bulk bcc metals because their plasticity differs significantly from the behaviour of fcc metals. A comparison of the glide systems in fcc and bcc metals demonstrates some of these differences. Glide of dislocations takes place on the closest packed crystallographic planes. The Burgers vector is usually the shortest connection between two atoms in the unit cell; i.e. $\frac{1}{2}[110]$ and $\frac{1}{2}[111]$ in fcc and bcc, respectively. In the case of fcc metals this leads to 12 glide systems of the following type.

$$\underbrace{\langle 110 \rangle}_{3(\text{symmetry of plane})} \cdot \underbrace{\{111\}}_{4(\text{number of planes})} \Rightarrow 12 \text{ glide systems}$$