1 Introduction

Ever since the invention of the first telephone by Phillip Reis in 1861, the twisted-pair copper wiring exists worldwide as part of gradually constructed infrastructure to support speech communications with an extremely large coverage. Developed over a century, the expanding network contains several hundred million copper telephone loop plants.

Indeed, such huge resource can be used not only for voice communications but also for today's digital communications and transmission technique with extremely high data rates. Therefore, the technology which can enable broadband digital communications over the existing telephone infrastructure is urged. Digital subscriber line (DSL) technology was developed to provide digital data transmission as well as telephony since the late 1980s [SCS99] [SSCS03]. In the past three decades consumer-oriented Asymmetric DSL (ADSL) as well as High speed DSL such as high bit rate DSL (HDSL), Symmetric DSL (SDSL) and Very high speed DSL (VDSL) were designed and operated in the market.

Nowadays, driven by the new applications such as the triple play of voice, data and video, consumers start to require fiber-fast broadband capacity and additionally high reliable transmission. Unfortunately, extending fiber to every home is still economically infeasible. Modern DSL systems such as VDSL2 systems are expected to be the last mile between the customer premise equipments (CPE) and the fiber-network core, and to enable the transmission with higher data rate and better quality of service (QoS).

Accordingly, modern DSL systems require those transmission techniques using larger frequency bands. Unfortunately, using larger frequency bands naturally leads to the problem of high crosstalk interference among copper lines which are originally designed for the purpose of speech communications. As the dominant impairment of DSL systems, crosstalk interference is typically 10 - 15 dB larger than background noise [GDJ06]. Therefore, crosstalk interference is the major issue need to be considered in modern DSL systems. Furthermore, the preferred transmission techniques should also have higher bandwidth efficiency and more flexibility and adaptivity to deal with various users and transmission scenarios.

In reply to those challenges, some technical solutions have been provided by researches.

Dieses Werk ist copyrightgeschützt und darf in keiner Form vervielfältigt werden noch an Dritte weitergegeben werden.
Es gilt nur für den persönlichen Gebrauch.

In particular, Multiple-Input-Multiple-Output (MIMO) technology has been studied for years. Normally, MIMO systems refer to multiple antenna systems in wireless communication systems where similar challenges exist. Due to the high capacities and the potential to dramatically improve the data transmission reliability, MIMO technology is highly recommended in wireless communication systems [TV05]. Generally, a MIMO system can be regarded as a system having multiple transmitters and receivers. In this respect, we can also apply the MIMO technology of multiple antenna systems into multiple coper line systems to deal with crosstalk interference. In other words, MIMO technology can be adopted for crosstalk cancellation in DSL systems where a plurality of coper lines are bundled together.

Typically, there is a central office (CO) of a DSL system being connected to the core of the fiber network via fiber. As shown in Figure 1.1, copper lines provide the further connection between the CO and the CPEs. From the user's perspective, the upstream (US) transmission is defined as the transmission from CPEs towards the CO. Conversely, the downstream (DS) transmission is from the CO to CPEs. A plurality of transceivers can be co-located in the CO while different CPEs are distributively located according to the users. Such deployments ensure that MIMO applications are feasible.

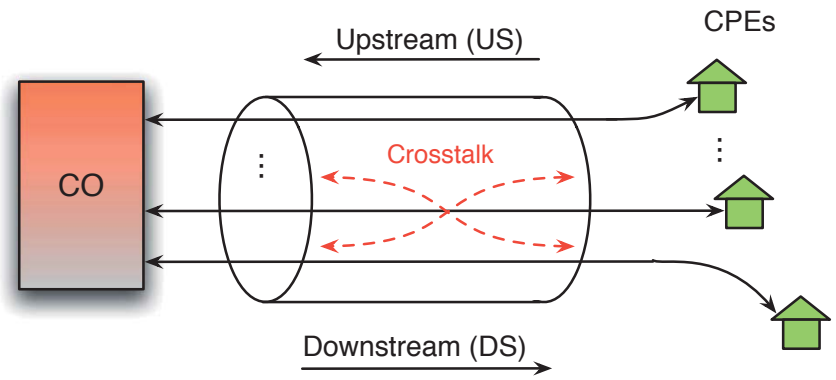

Figure 1.1: Transmission with co-located transceiver in CO

For many years, Discrete Multi-Tone (DMT) technique has been applied in DSL systems. In a single copper line, the DSL channel has very long transmission taps and is highly frequency selective. DMT technique, also known as Orthogonal Frequency Division Multiplexing (OFDM) technique [Roh11] in wireless communications can effectively partition a frequency selective channel into a large number of independent narrowband subchannels. By this means, high frequency selectivity over the complete channel band is converted into individual complex fading factors for each subchannel. With a sufficient long cyclic prefix inserted in each symbol, intersymbol interference (ISI) due to long transmission taps can be avoided. Meanwhile, adaptive modulation technique can be applied as

Dieses Werk ist copyrightgeschützt und darf in keiner Form vervielfältigt werden noch an Dritte weitergegeben werden.
Es gilt nur für den persönlichen Gebrauch.

each subchannel can be modulated individually according to the quality of the subchannel or possibly also to the transmission scenarios.

Furthermore, DMT/OFDM technique can be efficiently combined with MIMO techniques. The combination is natural and beneficial since DMT/OFDM technique dramatically simplifies the equalization procedures in MIMO systems, thereby supporting more transmitters and wider bandwidths in the combined systems.

Within the above-described context, this thesis is to analyze the crosstalk interference in modern DSL systems and focuses on the topic of crosstalk interference cancellation techniques. MIMO-OFDM transmission techniques are applied for crosstalk interference cancellation. The computation complexity of interference cancellation techniques is investigated for providing a reasonable trade-off in the systems. Moreover, QoS requirements of different users or lines are considered in the systems. Besides the interference cancellation techniques, power allocation for crosstalk cancellation is further studied.

Chapter 2 describes the physical as well as electrical characteristics of copper lines and the modeling for system simulations are introduced. In Chapter 3, the fundamentals of DMT transmission technique are discussed. In view of MIMO technology, the concrete system structures and models are given in Chapter 4.

After that, crosstalk interference cancellation techniques for both upstream transmission and downstream transmission are presented in Chapter 5 and the channel estimation (CE) aspects are considered in Chapter 6. The performance of the crosstalk interference cancellation techniques with and without perfect channel state information (CSI) is given in chapters 5 and 6, respectively. In Chapter 7, partial crosstalk cancellation with computation complexity reduction is proposed and the corresponding system performance is analyzed.

Faced with high QoS demands driven by those new applications, crosstalk cancellation techniques being aware of QoS requirements of different users are presented in Chapter 8. In particular, the crosstalk cancellation technique facing dynamic situations occurring in the systems is proposed.

In Chapter 9, power allocation for crosstalk interference cancellation is introduced. A heuristic method of distributing the transmit power of individual lines and its combination with partial crosstalk cancellation techniques are given, and the corresponding performance is provided.

In the end, summary is made in Chapter 10.

Dieses Werk ist copyrightgeschützt und darf in keiner Form vervielfältigt werden noch an Dritte weitergegeben werden.
Es gilt nur für den persönlichen Gebrauch.

2 DSL Channel

Backing to the original invention of telephone in 1879, copper lines have served for more than one century as transmission lines between transmitters and receivers. The DSL channel itself is very old and not much changed; however, a system design is confined by the property of the channel. The designer shall be aware of the channel characteristics. In this chapter, physical as well as electrical characteristics of telephone loops are described, then the crosstalk interference issue is addressed and the channel model considering crosstalk interference is given.

2.1 Physical characteristics of copper lines

The quality of the early approach of telephony was very poor since only a single conducting wire with the ground acting as the return path was used as the transmission line. The situation was dramatically improved by using a second conductor for differential mode signaling instead of the common mode. Meanwhile, within a cable the two wires of each pair are twisted around each other to form an unshielded twisted pair (UTP). Each pair is insulated by plastic material in distinctive color. To isolate the cable pairs from outside sources of electronic interference they are surrounded with a metallic shield.

In a cable with 25 twisted pairs or less, the pairs are usually enclosed in bindings of a certain color and forming a cylindrical shape. For larger cables, units of 25 pairs or super-units of 50 or 100 pairs are assembled to form a substantially cylindrical shape [GDJ06]. Each unit binder or super-unit binder are color coded such that each 25 pair group can be identified from the others. In this thesis, we focus our research on the cable scare within one or two units. A cable with a certain number of twisted pairs is referred to as a *cable binder*.

In the following, we first consider a single cable situation and describe the general electrical characteristics of twisted cable pairs in Section 2.2. Then, a cable binder situation is considered in sections 2.3 - 2.5 where crosstalk interference among the cable binder dominates the system performance degradation.

Dieses Werk ist copyrightgeschützt und darf in keiner Form vervielfältigt werden noch an Dritte weitergegeben werden.
Es gilt nur für den persönlichen Gebrauch.

2.2 Electrical characteristics of a single twisted cable pair

As transmission lines, the twisted cable pairs have the electrical characteristics which can be derived from the classic transmission line theory [Dwo79]. One can consider an infinitely small portion of uniform line dx as depicted in Figure 2.1. The circuit is made of the concatenation of a series impedance and a shunt impedance. Without the loss of generality, the series impedance is made of a resistance Rdx and an inductance Ldx; the shunt impedance is made of a conductance Gdx and a capacitance Cdx. The parameters R, L, G, and C are the so-called *primary parameters* and cited per unit length. So they are usually frequency dependent but assumed to be independent of length. The RLGC-parameters characterize the behavior of the transmission line. The *propagation constant* γ and *characteristic impedance* Z_0 of the transmission line are defined as

$$\gamma = \sqrt{(R + j2\pi fL)(G + j2\pi fC)}, \tag{2.1}$$

$$Z_0 = \sqrt{\frac{R + j2\pi fL}{G + j2\pi fC}}. \tag{2.2}$$

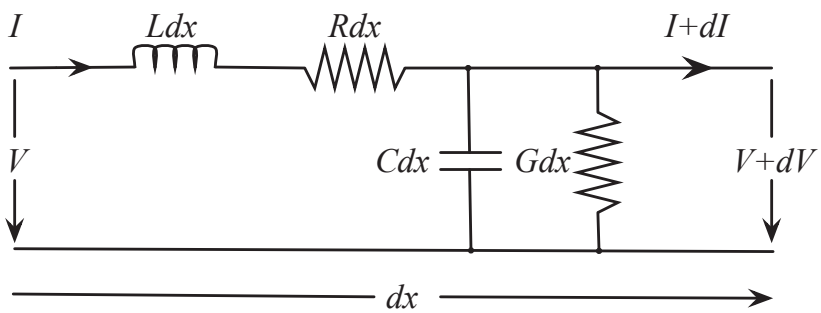

Figure 2.1: Line section of length dx with primary parameters

Now considering a line of length l connected with a voltage source V_S with the impedance Z_S and terminated with a load impedance Z_L as described in Figure 2.2, the cable line can be modeled as a two-port network with $ABCD$ parameters. If the load impedance Z_L matches the characteristic impedance Z_0, *i.e.*, $Z_L = Z_0$, the *transfer function* between V_L and V_S at frequency f becomes

$$H(f,l) = \frac{V_L}{V_S} = \frac{1}{2}e^{-l\gamma(f)}. \tag{2.3}$$

For practical reasons, it is often more relevant to use the concept of insertion loss instead of the transfer function. From a measurement perspective, it's very difficult to access V_S

Dieses Werk ist copyrightgeschützt und darf in keiner Form vervielfältigt werden noch an Dritte weitergegeben werden.
Es gilt nur für den persönlichen Gebrauch.

due to internal loading of the source. So telecommunication engineers use the ratio between the voltage over the load V_L, with the wireline inserted between the source and load, and the voltage over the load when it is connected directly to the source without the wireline in between. In many cases it is actually the insertion loss that is referred to as the transfer function.

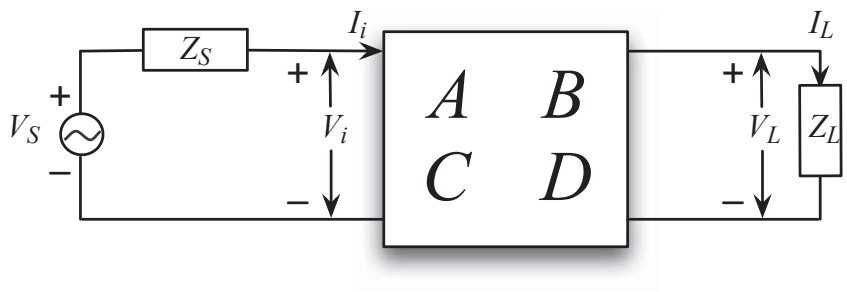

Figure 2.2: Uniform line of length l modeled as a two-port network

2.2.1 Classic direct channel model and measured channels

As described above, for a single transmission line the direct transmission channel can be considered as a Linear Time-Invariant (LTI) system characterized by its impulse response $h(t)$ and the corresponding channel transfer function $H(f)$. From equation (2.3) it can be seen that the channel transfer function $H(f)$ of a twisted pair depends on the length l of the wire and the propagation constant γ. Indeed, the frequency dependent propagation constant $\gamma(f)$ is a very accurate (± 0.2 dB) predictor of the attenuation at frequencies above about 20 kHz [Bin00].

The propagation constant is also called the complex propagation constant and can be written as

$$\gamma = \alpha + j\beta, \tag{2.4}$$

where the real part α is the so-called attenuation constant and the imaginary part β is the phase constant. The attenuation constant is often measured in nepers per meter and a neper is approximately 8.7 dB. It can be obtained by RLGC-parameters, as shown in equation (2.1).

Dieses Werk ist copyrightgeschützt und darf in keiner Form vervielfältigt werden noch an Dritte weitergegeben werden.
Es gilt nur für den persönlichen Gebrauch.